07 72 53
1657 South 580 East
American Fork, UT 84003

D1H CORRUGATED DECK MOUNT

DESCRIPTION

- **Must be installed into structural roof member such as a truss or rafter beam**
- All roof penetrations that go through the underlayment are required to be flashed or sealed
- Designed for most stick framed roof types
- Accepts 1” (1.315”OD) fence tube
- Installed using (4) 3/8” Lag bolts (recommended fasteners sold separately)
- Ice Flags recommended
- Powder coated to match roofing material color
- Overall dimensions: 4.69”L X 1.69”W X 5.04”H

MATERIALS

- Zinc Coated Steel: 3/16” (ASTM A1011 & ASTM A36)
- Copper: 1/4” (ASTM B152)
- Weathering Steel (known as CORTEN®): 3/16” (ASTM A588)

COLORS/FINISHES

- Uncoated Steel
- Zinc Plated Steel
- Mill Finish Copper
- Mill Finish A588
- Powder coating available in many colors visit http://trasnowandsun.com/color-chart/ to see color chart

NOTE: Due to specific job conditions, TRA Snow and Sun will only warranty a

1 TUBE SNOW FENCE SYSTEM

USED ON: CORRUGATED

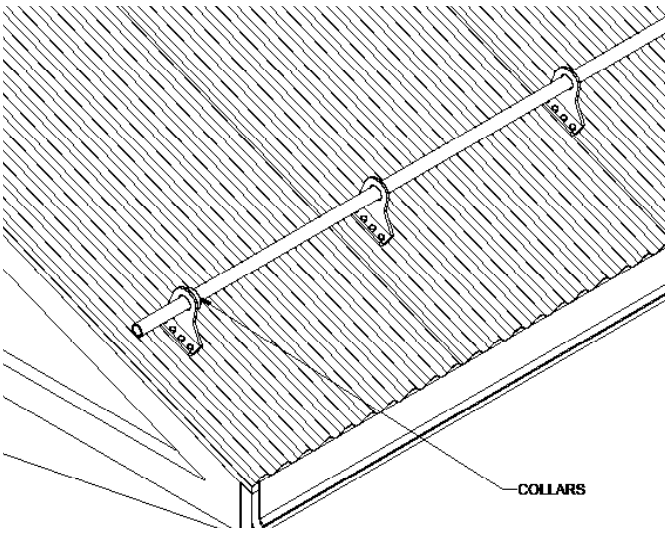

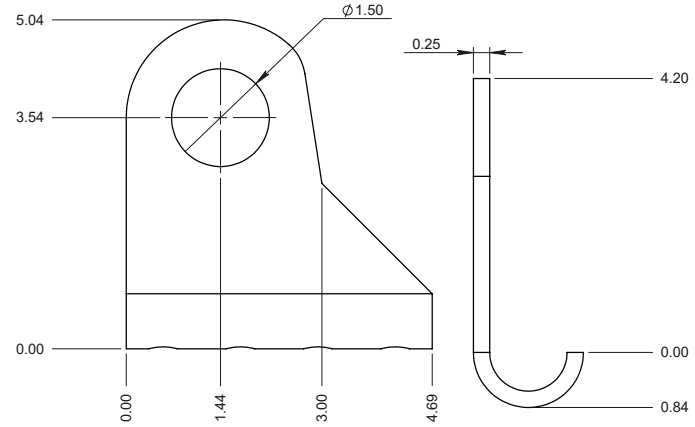

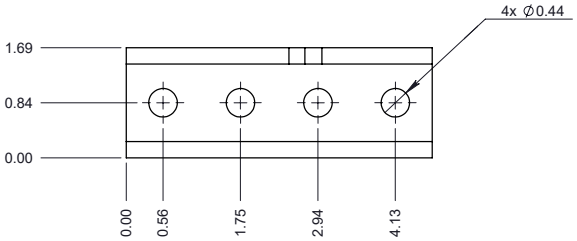

DIMENSIONS
DO NOT SCALE

INSTALLATION INSTRUCTIONS:
SNOW FENCE IS INSTALLED WITH FOUR 3/8" X 4" LAG BOLTS SCREWED INTO RAFTERS/TRUSSES, BLOCKING OR OTHER STRUCTURAL FRAMING. LOCATE TRUSSES, POSITION SNOW FENCE HOLES DIRECTLY OVER CENTER OF TRUSS, PRE-DRILL HOLES TO A DEPTH OF 4" USING A 1/4" DRILL BIT. WE ADVISE PLACING SOME TYPE OF CAULKING OR SEALANT IN THE LOCATION OF THE HOLES BEFORE INSTALLING LAGS. FLASHINGS CAN THEN BE FABRICATED AND PLACED AT THE INSTALLERS DISCRETION.

* ALL ROOF PENETRATIONS THAT GO THROUGH THE UNDERLAYMENT ARE REQUIRED TO BE FLASHED OR SEALED.

SNOW RETENTION SYSTEMS

©TRA Snow and Sun, Inc., 2025 Revision 08/21/25